telergon
gorlan



ATS

Automatic Transfer Switch

IEC

www.telergon.com

gorlan

Automatic Transfer Switch

An automatic transfer switch (ATS) is a self-acting device that automatically transfers a power supply from its primary source to a backup source during a power failure or outage. It monitors the power supply and detects outages or fluctuations, switching to the backup system without manual intervention. The main objective of this solution is to ensure continuous power supply to critical systems.



C2C SERIES

40A – 80A



C1 SERIES

63A – 630A



C2 SERIES

63A – 630A

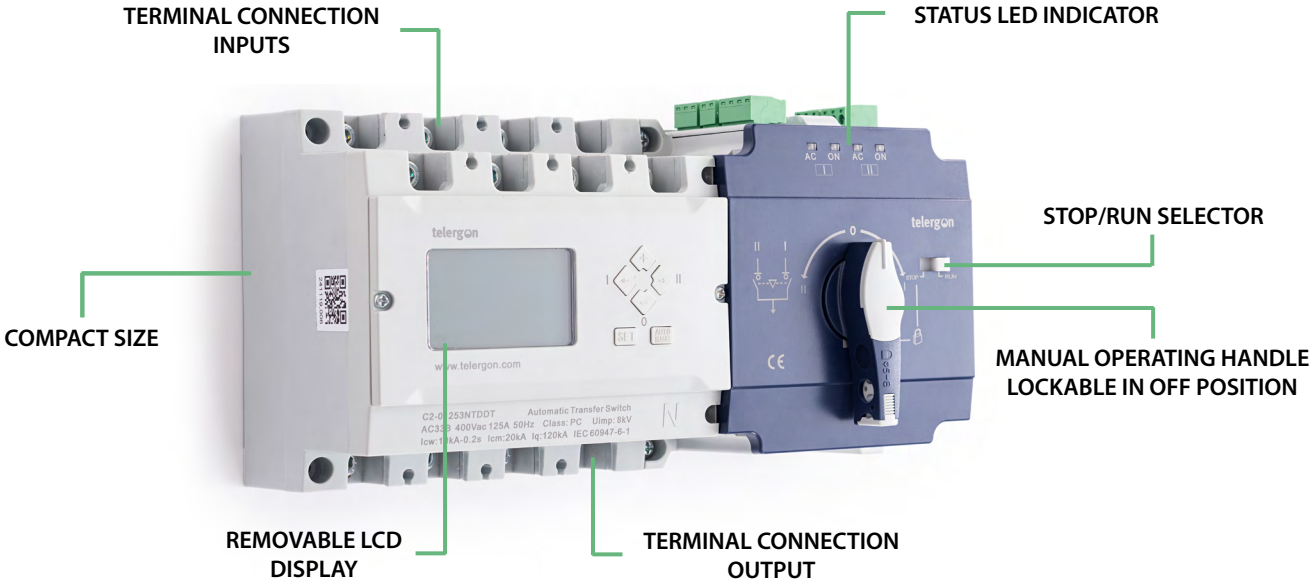

Maintenance free

Easy installation and operation

High short-circuit resistance

Quick make-and-break operation

High electrical and mechanical reliability

Choose your configuration

C1 Series Type G

Remote operation

- AC-32B
- Easy installation
- Remote control

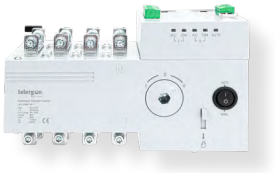

C2C Series Type A

Automatic

- AC- 33B
- DIN Rail mounting
- Modular design



C1 Series Type C

Automatic transfer

- Three-phase monitoring
- Fire-fighting protection
- Generator control



C2 Series Type D

Automatic & programmable

- AC- 33B
- LCD display included
- RS-485 for remote communication



FUNCTIONS OF THE SERIES

FUNCTIONS		40A-80A	63A - 630A		
		C2C	C1	C1	C2
Configuration type		A	G	C	D
External 230Vac supply for sources I and II			●		
LED indicators	Source I and II availability	●	●	●	●
	Switch position I and II		●	●	●
Remote control via potential free contacts			●		
Potential free auxiliary contact 1NO for source I and II			●		
Auto transfer / auto recovery		●		●	●
Configurable source priority				●	●
Source I monitoring:	Three-phase voltage	●		●	●
	Single-phase voltage	●		●	●
	Frequency			●	●
	Phase imbalance			●	●
Source II monitoring:	Three-phase voltage			●	●
	Single-phase voltage	●		●	●
	Frequency			●	●
Fire-linkage (passive)				●	●
Generator Start/Stop				●	●
12-24 V DC auxiliary power supply input				●	●
LCD display				OPTION	●
RS-485					●
AC-32B			●	●	
AC-33B		●			●

TECHNICAL DATA C2C SERIES

According to IEC 60947-6-1			00		
C2C SERIES			40	63	80
Thermal current (Ith)	A		40	63	80
Rated insulation voltage (Ui)	V		690		
Rated impulse withstand voltage (Uimp)	kV		8		
Rated operational current (Ie)					
AC-31B 415V	A		40	63	80
AC-32B 415V					
AC-33B 415V					
Rated short-circuit making capacity (peak value) (Icm)	kA		8,5		
Rated short-time withstand current 30ms (Icw)	kA		5		
Rated conditional short-circuit current (Icc)	kA		120		
Operating transfer time	s		1,5		
Contact transfer time	s		1		
ATSE Class	PC Class AC-33B				
Operation cycles	cycles		6.000		
Maximum weight	kg	1P+N	0,8		
		3P	0,9		
		3P+N	1		
Tightening torque	Size		M5	M5	M5
	Nm		2	2	2
Max. Connection capacity. Cu cable.	mm^2		25	25	25
Min. Connection capacity. Cu cable.	mm^2		10	16	25
Max. Connection capacity. Cu bar.	mm		-		
Min. Connection capacity. Cu bar.	mm		-		

TECHNICAL DATA C1 SERIES

According to IEC 60947-6-1		00				0	1	2	
		63	80	100	125	160	250	400	630
Thermal current (Ith)	A	63	80	100	125	160	250	400	630
Rated insulation voltage (Ui)	V	690							
Rated impulse withstand voltage (Uimp)	kV	8							
Rated operational current (Ie)									
AC-31B 415V	A	63	80	100	125	160	250	400	630
AC-32B 415V									
Rated short-circuit making capacity (peak value) (Icm)	kA	8				17	17	26	
Rated conditional short-circuit current (Icc)	kA	120							
Rated control voltage		230V / 50Hz							
Operating transfer time	s	1,7				2,3	3,1	2,1	
Contact transfer time	s	0,7				1	1,2	0,8	
TSE Class		PC class AC-32B							
Operation cycles	cycles	6.000				6.000	6.000	4.000	3.000
Maximum weight	kg	3,8				8,5	11,5	22,6	
Tightening torque	Size	M6				M8	M10	M12	
	Nm	3				6	10	14	
Max. Connection capacity. Cu cable.	mm^2	50				70	120	240	2x240
Min. Connection capacity. Cu cable.	mm^2	16	25	35	50	70	120	240	2x185
Max. Connection capacity. Cu bar.	mm	3x15	3x15	4x20	4x20	5x25	5x25	10x40	10x40
Min. Connection capacity. Cu bar.	mm	2x15	2x15	3x15	3x20	4x20	6x20	10x30	10x40

TECHNICAL DATA C2 SERIES

According to IEC 60947-6-1		00		0		1		2	
C2 SERIES		63	80	100	125	160	250	400	630
Thermal current (Ith)	A	63	80	100	125	160	250	400	630
Rated insulation voltage (Ui)	V	690							
Rated impulse withstand voltage (Uimp)	kV	8							
Rated operational current (Ie)									
AC-31B 415V	A	63	80	100	125	160	250	400	630
AC-32B 415V									
AC-33B 415V									
Rated short-circuit making capacity (peak value) (Icm)	kA	15		20		30		50	
Rated short-time withstand current 0,2s (Icw)	kA	10*[1]		10		10		25	
Rated conditional short-circuit current (Icc)	kA	120							
Rated control voltage *[2]		230V / 50Hz							
Operating transfer time	s	1,2		1,25		2,1		3,3	
Contact transfer time	s	0,6		0,6		1		1,5	
ATSE Class		PC Class AC-33B							
Operation cycles	cycles	6.000		6.000		6.000		4.000	3.000
Maximum weight	kg	2,5		4,3		9		22,5	
Tightening torque	Size	M5	M5	M6	M6	M8	M8	M12	M12
	Nm	2	2	3	3	6	6	14	14
Max. Connection capacity. Cu cable.	mm^2	25	25	50	50	120	120	240	2x185
Min. Connection capacity. Cu cable.	mm^2	16	25	35	50	70	120	240	2x185
Max. Connection capacity. Cu bar.	mm	-	-	4x20	4x20	5x25	5x25	10x40	10x40
Min. Connection capacity. Cu bar.	mm	-	-	3x15	3x20	4x20	6x20	10x30	10x40

*[1] 30ms
*[2] For other voltages, please consult.

C2C SERIES AUTOMATIC TRANSFER SWITCH | 1P+N, 3P & 3P+N | 40A-80A



Size	Amp	Conf. Type	Poles	Connection	Switch
00	40	A	1P+N		C2C00401NBDAT
			3P		C2C00403PBDAT
			3P+N		C2C00403NBDAT
	63		1P+N		C2C00631NBDAT
			3P		C2C00633PBDAT
			3P+N		C2C00633NBDAT
	80		1P+N		C2C00801NBDAT
			3P		C2C00803PBDAT
			3P+N		C2C00803NBDAT



C2C SERIES | DIMENSIONS

Size 00 (40A-63A-80A) 3P+N

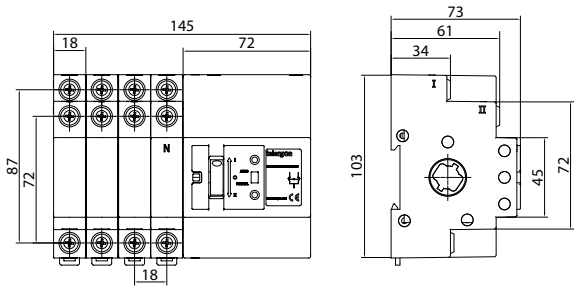

Size 00 (40A-63A-80A) 3P

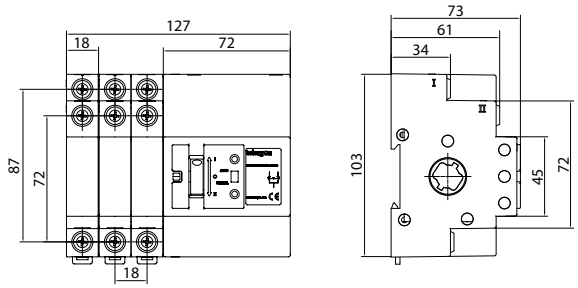

In 3-phase versions, the neutral connection is required for the equipment to operate

Size 00 (40A-63A-80A) 1P+N

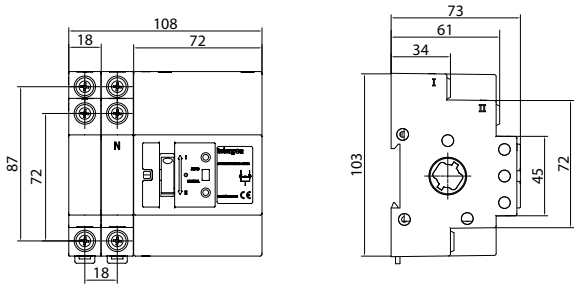

C1 SERIES AUTOMATIC TRANSFER SWITCH | 1P+N, 3P & 3P+N | 63A-630A







Size	Amp	Conf. Type	Poles	Connection	Switch	Shrouds*1	Display *3	Display cover IP67
00	63	G	3P		C1-00633PSMGB	DC1CUB1	DC1DP01	DC1VD01
			3P+N		C1-00633NSMGB			
		C	1P+N*2		C1-00631NSMCB			
			3P		C1-00633PSMCB			
			3P+N		C1-00633NSMCB			
	80	G	3P		C1-00803PSMGB			
			3P+N		C1-00803NSMGB			
		C	1P+N*2		C1-00801NSMCB			
			3P		C1-00803PSMCB			
			3P+N		C1-00803NSMCB			
	100	G	3P		C1-01003PSMGB			
			3P+N		C1-01003NSMGB			
		C	1P+N*2		C1-01251NSMCB			
			3P		C1-01003PSMCB			
			3P+N		C1-01003NSMCB			
	125	G	3P		C1-01253PSMGB			
			3P+N		C1-01253NSMGB			
		C	1P+N*2		C1-01251NSMCB			
			3P		C1-01253PSMCB			
			3P+N		C1-01253NSMCB			
0	160	G	3P		C1-01603PSMGB	DC1CU01		
			3P+N		C1-01603NSMGB			
		C	3P		C1-01603PSMCB			
			3P+N		C1-01603NSMCB			
1	250	G	3P		C1-02503PSMGB	DC1CU11		
			3P+N		C1-02503NSMGB			
		C	3P		C1-02503PSMCB			
			3P+N		C1-02503NSMCB			
2	400	G	3P		C1-04003PSMGB	DC1CU21		
			3P+N		C1-04003NSMGB			
		C	3P		C1-04003PSMCB			
			3P+N		C1-04003NSMCB			
	630	G	3P		C1-06303PSMGB			
			3P+N		C1-06303NSMGB			
		C	3P		C1-06303PSMCB			
			3P+N		C1-06303NSMCB			

*1 To protect inputs and outputs, 2 units are required.
*2 Single-phase version. For more amperages, consult.
*3 Display available only for type C. Cat 5E Ethernet cable with RJ45 connectors included with the display.

C1 SERIES | DIMENSIONS

Size 00 (63A-80A-100A-125A)

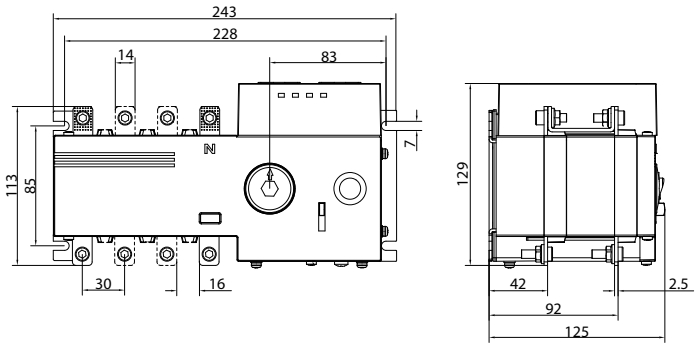

In the single-phase version, only terminals L1 and N are included.

Size 0 (160A)

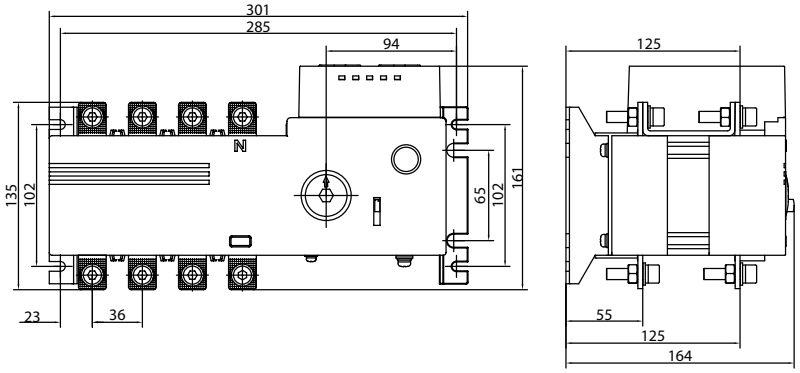

Size 1 (250A)

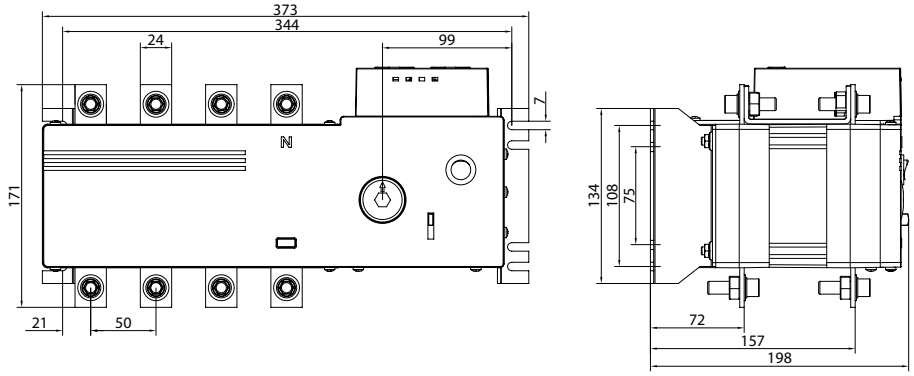

Size 2 (400A-630A)

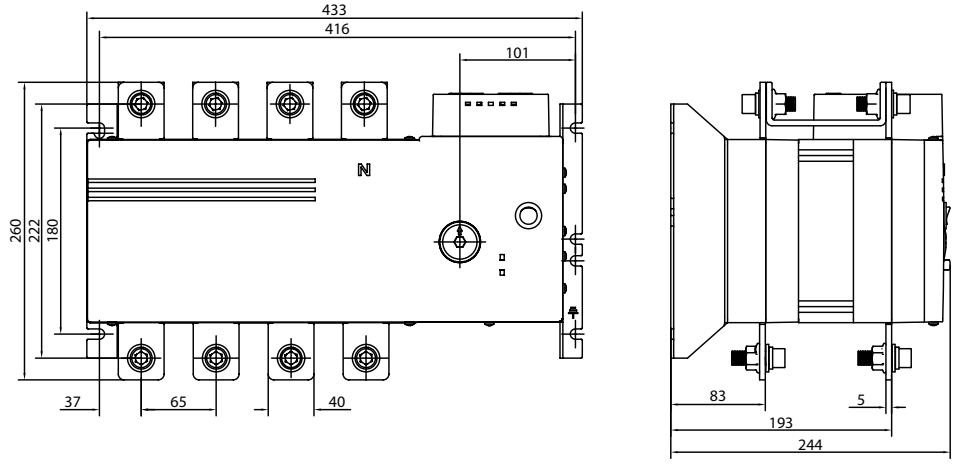

C2 SERIES AUTOMATIC TRANSFER SWITCH | 1P+N, 3P & 3P+N | 63A-630A








Size	Amp	Conf. Type	Poles	Connection	Switch	Extension bars	Shrouds	Display *3	Display cover IP67
00	63	D	1P+N*2		C2-00631NBDDT	-	-	DC1DP01	DC1VD01
			3P		C2-00633PBDDT				
			3P+N		C2-00633NBDDT				
	80		1P+N*2		C2-00801NBDDT				
			3P		C2-00803PBDDT				
			3P+N		C2-00803NBDDT				
0	100	D	1P+N*2		C2-01251NTDDT	DC2EB01	DC2CU01		
			3P		C2-01003PTDDT				
			3P+N		C2-01003NTDDT				
	125		1P+N*2		C2-01251NTDDT				
			3P		C2-01253PTDDT				
			3P+N		C2-01253NTDDT				
1	160	D	3P		C2-01603PTDDT	DC2EB11	DC2CU11		
			3P+N		C2-01603NTDDT				
	250		3P		C2-02503PTDDT				
			3P+N		C2-02503NTDDT				
2	400	D	3P		C2-04003PTDDT	DC2EB21	DC2CU21		
			3P+N		C2-04003NTDDT				
	630		3P		C2-06303PTDDT				
			3P+N		C2-06303NTDDT				

*2 Single-phase version. For more amperages, consult.
*3 Cat 5E Ethernet cable with RJ45 connectors included with the display.

S5F Series

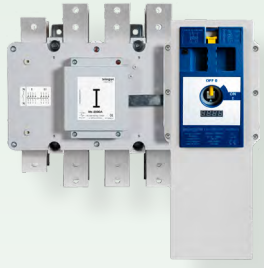

OTHER MOTORIZED SOLUTIONS

125A-3150A

3P & 3P+N

120Vac & 230Vac

Modbus available

CCF Series



C2 SERIES | DIMENSIONS

Size 00 (63A-80A)

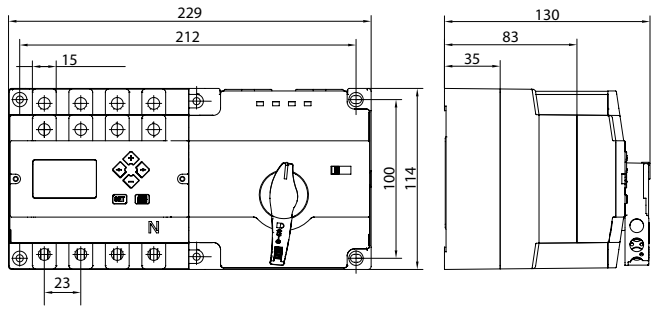

In the single-phase version, only terminals L1 and N are included.

Size 0 (100A-125A)

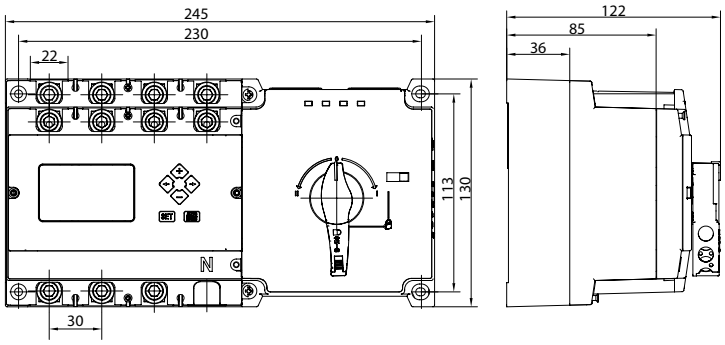

In the single-phase version, only terminals L1 and N are included.

Size 1 (160A-250A)

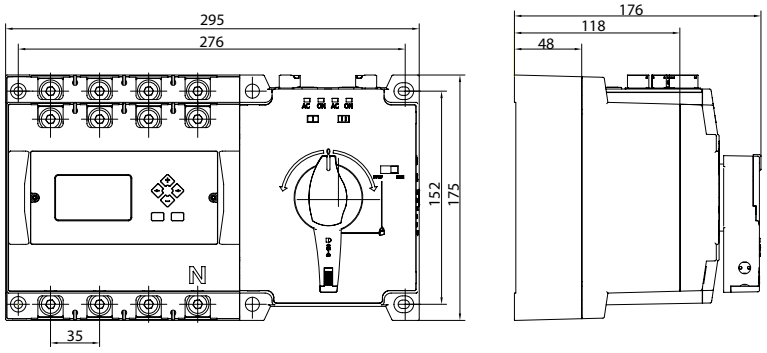

Size 2 (400A-630 A)

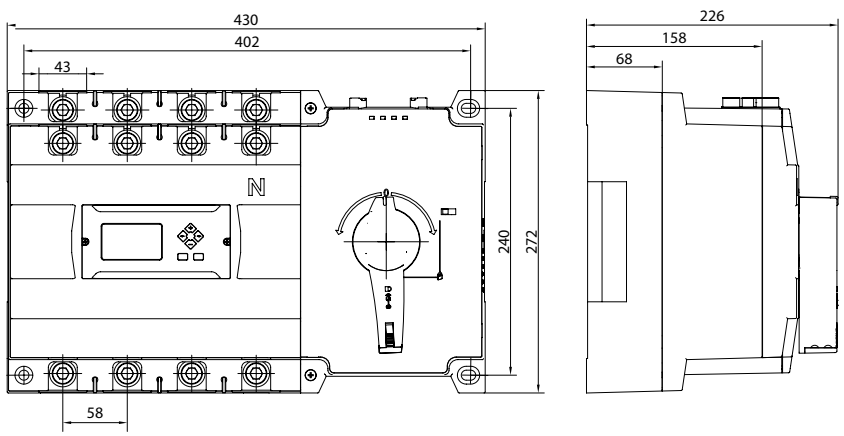

CTRL1 SERIES | C1 TYPE C

63A – 630A



Suitable for environments subject to mechanical risks and dust hazards.

Protection degree
IP66.

Colour
RAL 7035.

Closing plate
Bottom.

Connection
top (input terminals)
bottom (output terminals)

Protection
Polycarbonate protection cover

Material
2 mm thick steel

Coating
Epoxy resin

Mounting
Wall







Size	Amp	Material	Poles	Connection	Code	Display *3	Display cover IP67
00	63	Metal	1P+N*2		CTRL1C00631NSBM	DC1DP01	DC1VD01
		Metal	3P+N		CTRL1C00633NSBM		
		Polyester	1P+N*2		CTRL1P00801NSBM		
		Polyester	3P+N		CTRL1P00633NSBM		
	80	Metal	1P+N*2		CTRL1C00801NSBM		
		Metal	3P+N		CTRL1C00803NBBN		
		Polyester	1P+N*2		CTRL1P00801NSBM		
		Polyester	3P+N		CTRL1P00803NSBM		
0	100	Metal	3P+N		CTRL1C01003NSBM		
		Polyester	3P+N		CTRL1P01003NSBM		
	125	Metal	3P+N		CTRL1C01253NSBM		
		Polyester	3P+N		CTRL1P01253NSBM		
1	160	Metal	3P+N		CTRL1C01603NSBM		
		Polyester	3P+N		CTRL1P01603NSBM		
	250	Metal	3P+N		CTRL1C02503NSBM		
		Polyester	3P+N		CTRL1P02503NSBM		
2	400	Metal	3P+N		CTRL1C04003NSBM		
	630	Metal	3P+N		CTRL1C06303NSBM		

*2 Single-phase version. For more amperages, consult.
*3 Cat 5E Ethernet cable with RJ45 connectors included with the display.

CTRL1 SERIES | DIMENSIONS

Metal - Size 00 (63A-80A)

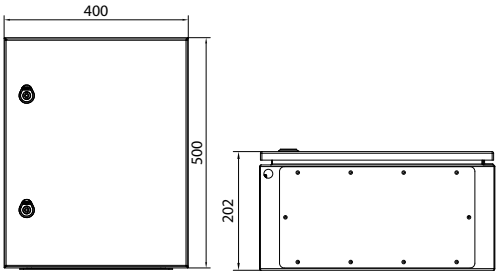

Metal - Size 0 (100A-125A)

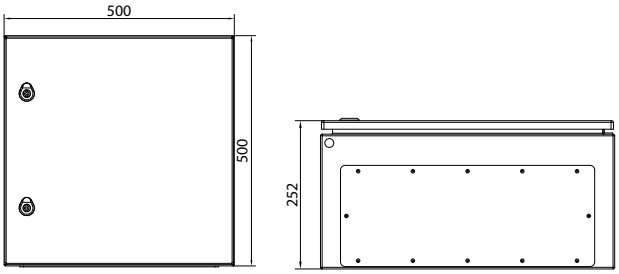

Metal - Size 1 (160A-250A)

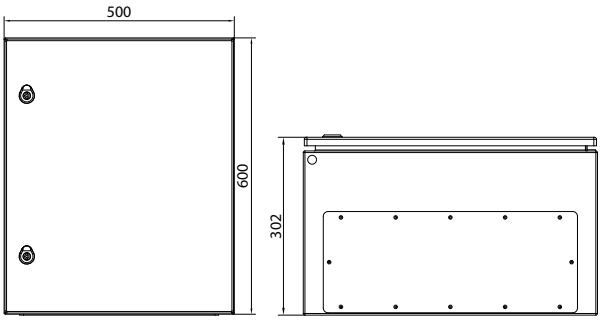

Metal - Size 2 (400A-630A)

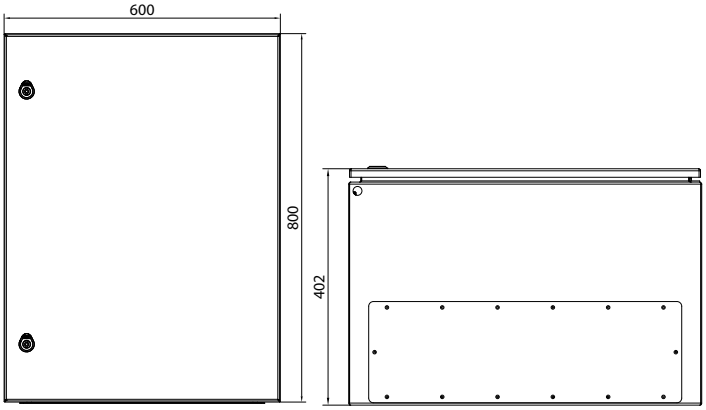

CTRL2 SERIES | C2 TYPE D

63A – 630A



Suitable for environments subject to mechanical risks and dust hazards.

Protection degree
IP66

Colour
RAL 7035

Closing plate
Bottom

Display
Installed on door with protective cover

Connection
≤250A top and bottom
≥400A bottom (via copper connection plates)

Protection
63-80A flange connection
100-250A shrouds
400-630A polycarbonate plate

Inputs, outputs and auxiliary contacts
Pre-wired to DIN rail terminals

Material
2 mm thick steel.

Coating
Epoxy resin.

Mounting
Wall





Size	Amp	Material	Poles	Connection	Code
00	63	Metal	1P+N*2		CTRL2C00631NBBN
		Metal	3P+N		CTRL2C00633NBBN
		Polyester	1P+N*2		CTRL2P00801NBBN
		Polyester	3P+N		CTRL2P00633NBBN
	80	Metal	1P+N*2		CTRL2C00801NBBN
		Metal	3P+N		CTRL2C00803NBBN
		Polyester	1P+N*2		CTRL2P00801NBBN
		Polyester	3P+N		CTRL2P00803NBBN
0	100	Metal	3P+N		CTRL2C01003NTBN
		Polyester	3P+N		CTRL2P01003NBBN
	125	Metal	3P+N		CTRL2C01253NTBN
		Polyester	3P+N		CTRL2P01253NBBN
1	160	Metal	3P+N		CTRL2C01603NTBN
		Polyester	3P+N		CTRL2P01603NBBN
	250	Metal	3P+N		CTRL2C02503NTBN
		Polyester	3P+N		CTRL2P02503NBBN
2	400	Metal	3P+N		CTRL2C04003NTBO
	630	Metal	3P+N		CTRL2C06303NTBO

*2 Single-phase version. For more amperages, consult.
Accessories included in the assembly: shrouds (for sizes 0, 1 and 2), display, and display cover.

CTRCFC - S5F Series



OTHER ENCLOSED SOLUTIONS

125A-2000A
3P & 3P+N
IP65
Mains - Gen management

CTRCCC - CCF Series



CTRL2 SERIES | DIMENSIONS

Metal - Size 00 (63A-80A)

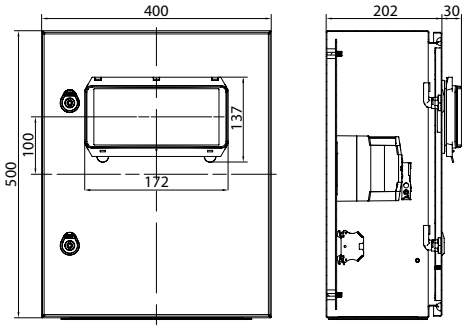

Metal - Size 0 (100A-125A)

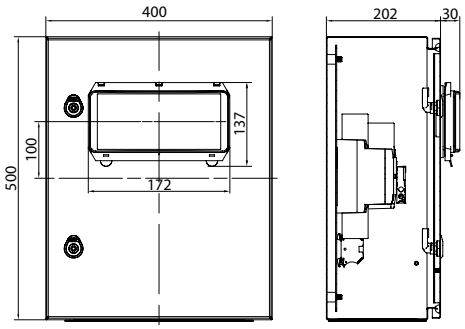

Metal - Size 1 (160A-250A)

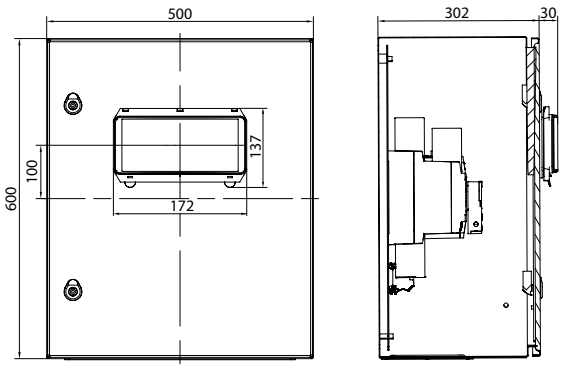

Metal - Size 2 (400A-630A)

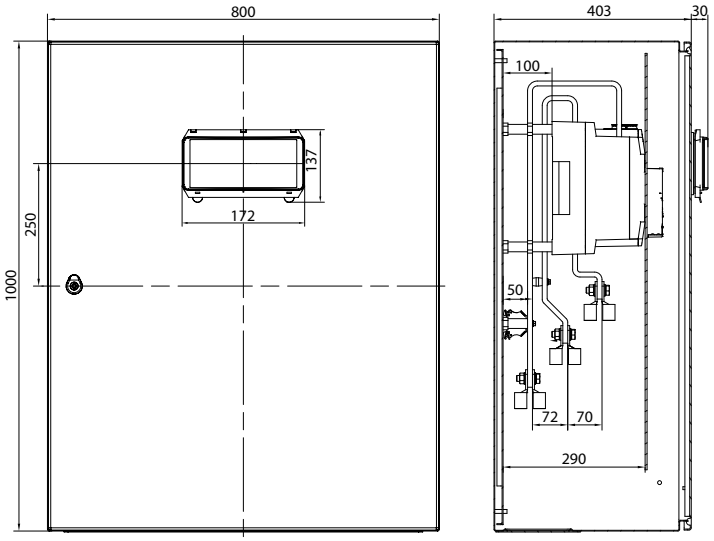



Telergon, SAU
Ctra. Castellón – Pol. La Cartuja
50720 La Cartuja Baja
Zaragoza, Spain

Tel. +34 976 500 876
info@telergon.com
www.telergon.com

TDM-ATS-ENG-112026