telergon
gorlan







Battery Energy Storage Systems

www.telergon.com

gorlan

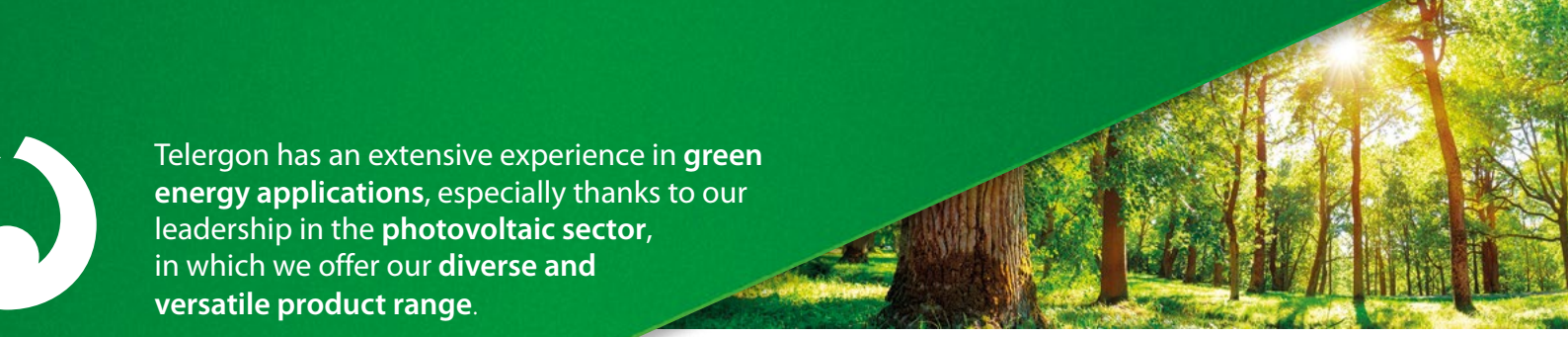

Telergon has an extensive experience in **green energy applications**, especially thanks to our leadership in the **photovoltaic sector**, in which we offer our **diverse and versatile product range**.

Due to our experience and R+D commitment we have been able to evolve and adapt our wide range of products to market trends.

Currently, energy storage is growing and we have adapted our solutions to the needs of this sector, mainly for OEM's of batteries, system integrators and PCS / inverters manufacturers.

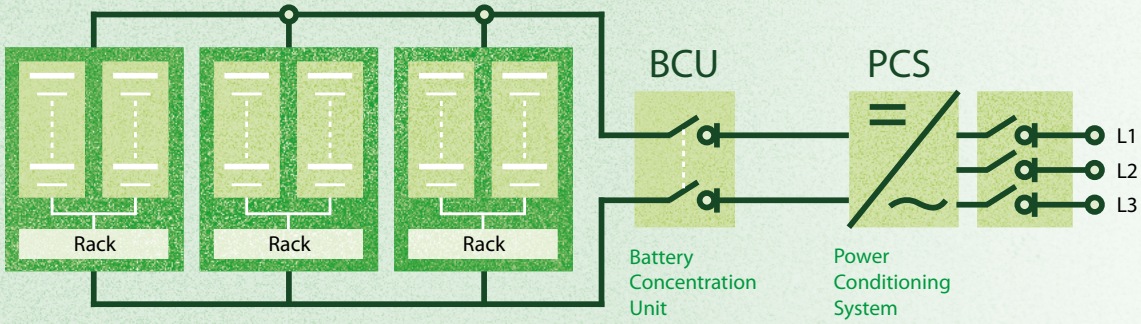

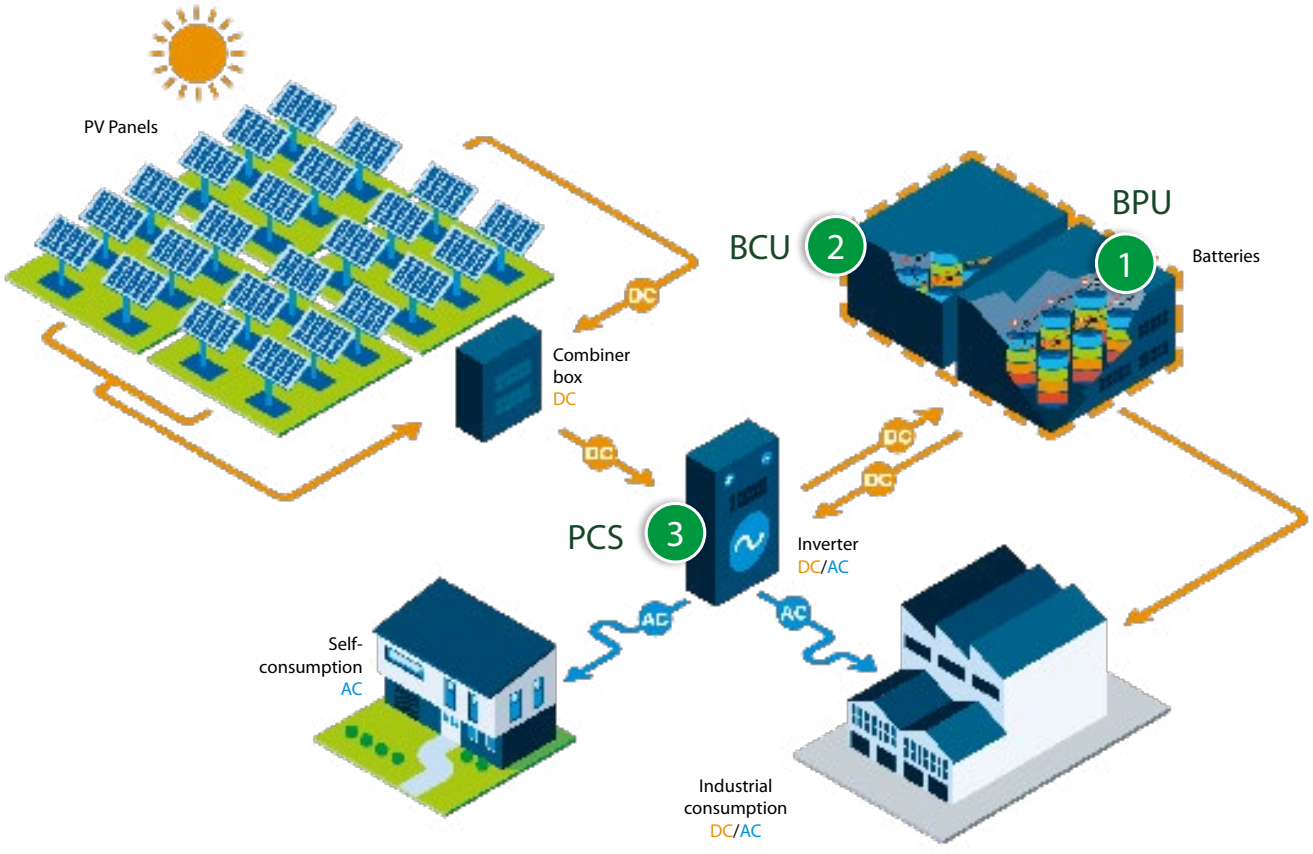



1 BPU

Battery Protection Unit

Each module or battery rack has a **Battery Protection Unit (BPU)** that must have installed a **switch up to 400 A 1000 Vdc / 1500 Vdc**, ready to break and isolate.

Suitable for different type of installations:

- Rack installed in containers
- Centralized electrical board where the different modules are connected.

2 BCU

Battery Concentration Unit

The **Battery Concentration Unit (BCU)** is equipped with a **main switch disconnector from 1000 A to 5000 A**. For the maintenance of the container, it is recommended to install an **isolation only disconnector**, that allows to isolate the container from the current for a safe and convenient **maintenance**.

3 PCS

Power Conditioning System

These bidirectional inverters are able **to charge energy** into batteries from a DC (for example, a photovoltaic plant) or AC generation source, **and discharge it**, when needed, for residential and industrial use.

Generally, they need to install a **powerful main switch disconnector DC (up to 1800 A)** with **manual or motorised operation**, depending on the needs of the installation.

AC switch disconnectors may also be required, depending on the application, **up to 800 Vac**.





HOW TO PROTECT A BESS INSTALLATION

Selecting the right switchgear solutions for a BESS installation is essential to ensure the system operates safely, efficiently, and reliably. It also helps future-proof the installation, enabling scalability and adaptability to evolving energy demands.

The right switchgear solutions must have:

- Quick disconnection to prevent damage or hazards.
- Motorized operation available to use them remotely
- Safety quality standards to minimize risks to the staff and equipment.
- Compatibility with the specific requirements of the BESS, such as its voltage range, current levels, and inverter characteristics.
- High-conditional short-circuit current and arc-resistant features to minimize risks to the staff and equipment.

MAIN BENEFITS OF TELERGON SOLUTIONS

High conditional short-circuit current

---> Up to 120 kA rms*

- **Quick and easy installation**
- **High connection capacity**
- **Optimized phase to phase distance**
- **Safer and more reliable breaking**



* Consult the specific data for each series and size

1 BPU

DC ON-OFF LOAD SWITCH-DISCONNECTORS
125 - 500 A | 1000 - 1500 Vdc



Series
S6 DC
1P - 2P | 125A - 630 A | 1000Vdc

High reliability
Ready to motorise
Bridging links are not required, avoiding potential hot spots and simplifying the installation in cost and time



Series
S7 DC
2P | 125A - 500 A | 1500Vdc

Maximised electrical performance
High safety level
Suitable for extreme environments
Compact design
Longer life



Isolation only
S6
1P - 2P | 160 A - 800 A | 1500Vdc

Easy installation
Motorised option
Multi-circuit switching (from 1 up to 8 circuits) can be isolated with only one handle

Residential or commercial

NEW



Series
F1 DC
2P-4P | 32 A | 1500Vdc

Different types of mountings.
Different connection schemes.
Materials for an IP66 protection.

NEW



Series
F7 DC
2P-10P | 13A up to 55 A | 1500Vdc

Modular and compact design.
Easy installation and maintenance
DC-PV1 and DC-PV2

2 BCU

DC ON | OFF LOAD DISCONNECTORS
UP TO 3150 A | 1000 - 1500 Vdc

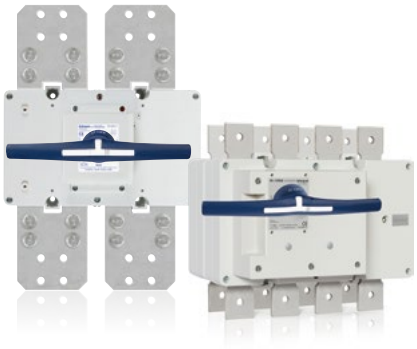

Series
S5 & S5N DC
4P | Up to 3150 A | 1000 Vdc

4P+4P (S5N)

Back-to-back with operating mechanism in front, arrangement to increase the number of available contacts

Manual or motorised



Isolation only
S5 / S6
1P - 2P | 800 A - 3150 A | 1500 Vdc

Compact and flexible solution

Optimised dimensions

Motorised option

DO NOT OPERATE UNDER LOAD



Series
M3
2P, 3P, 3P+N, 3P+DN | 32A up to 250 A

BS, Class J, NFC and NH fuses

Modular and compact design

TEST position on the handle

3 PCS

AC SWITCH-DISCONNECTORS
FOR 800 Vac



Series
S5
3P | 1600 A

High performance



Series
S6
3P | 250 A - 630 A

Decentralized installations

Motorized operation option

* Consult values for 1000Vac.

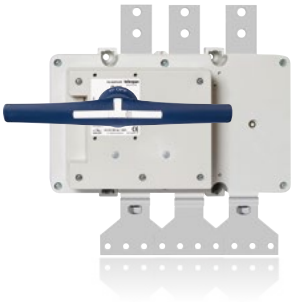

Series
S5N
6P | 3200 A

Common outputs

Telergon, SAU
Ctra. Castellón – Pol. La Cartuja
50720 La Cartuja Baja
Zaragoza, Spain

Tel. +34 976 500 876
info@telergon.com
www.telergon.com

TDM-API-ESS-ENG-022025