telergon
gorlan

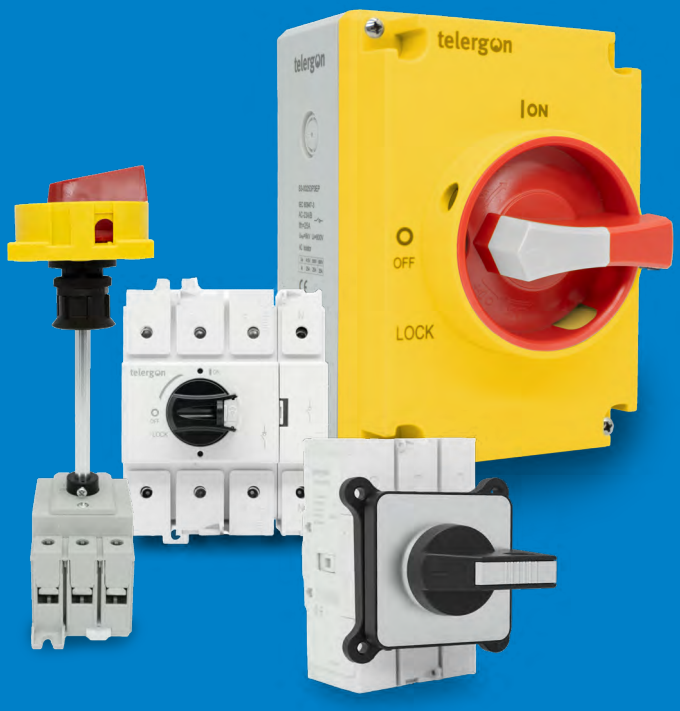

S3 Series
AC Compact Switch-Disconnectors

IEC

www.telergon.com

gorlan

series S3 AC Compact Switch-Disconnector

The Telergon S3 Series is a compact and modular range of switch-disconnectors designed for safe isolation in industrial and commercial low-voltage installations. Engineered for reliability and flexibility, the S3 series meets the most demanding international standards, ensuring optimal performance in modern electrical distribution systems.

- 16 A to 125 A
  Up to 600 V AC
- Modular design
  Neutral early-make and late-break
- Wide range of accessories
- Positive opening mechanism for enhanced operator safety
- DIN-Rail or door mounting for easy installation
- Direct/external handle
  Type 4/4X, IP65



Applications



Industrial switchboards and control panels
Suitable for motor disconnects



Electrical distribution
In commercial and tertiary buildings



OEM solutions for HVAC, machinery, and automation
Renewable energy systems and auxiliary services in power electronics

Mountings



DIN Rail
Mounting
IP20



Door Interlock
Screw anchoring
Screwless anchoring
(quick-release central fixing)
IP66



Panel
Mounting
IP66



Plastic
Enclosure
IP66



Aluminium
Enclosure
IP66

Certified for global markets

IEC 60947-3

UL60947-1
UL60947-4-1 LISTED (formerly UL508)

CSA 22.2 No 60947-4-1

UL Guide NLRV
File E123623

TECHNICAL DATA | IEC 60947-3

			Size								
			000						00		0
Electrical data											
Thermal current (-25...+55°C)	Ith	A	16	20	25	32	40	63	80	100	125
Rated insulation voltage	Ui	Vac	800								
Rated impulse withstand voltage	Uimp	kV	8								
AC rated operational current	Ue 415V AC23A	A	16	20	25	32	40	63	80	100	125
	Ue 500V AC23A		16	20	25	32	40	63	80	100	-
	Ue 690V AC23A		16	20	25	32	40	63	80	100	-
AC rated operational power	Ue 415V AC23A	kW	7.5	9	11	15	18.5		37	45	55
Short-circuit behavior (fuse protected)											
Fuse type	415V	A	16	20	25	32	40	63	80	100	125
Rated conditional short-circuit current	415V	kA	10							20	
Short-circuit behavior performance (unprotected)											
Rated short-time withstand current (1S)	Icw	kA (rms)	0,5					0,8	0,85	1,5	2,75
Rated short circuit making capacity	Icm	kA (peak)	0,85					1,15	1,5	2,1	3,9
Connection capacity											
Cable cross section	mm²		1,5~10					5~16	2,5~35		10~70
Tightening torque	Nm		1,2~1,4					1,2~1,4	2,5~2,8		3,5~4
Mechanical data											
Number of operating cycles	Cycles		10.000								

DIN-RAIL MOUNTING (DB)





					
		3P	3P+N	3P	3P+N
Size	Amp	Code	Code	Code	Code
000	16	S3-00163P1DB	S3-00163N1DB	S3-00163P5DB	S3-00163N5DB
	20	S3-00203P1DB	S3-00203N1DB	S3-00203P5DB	S3-00203N5DB
	25	S3-00253P1DB	S3-00253N1DB	S3-00253P5DB	S3-00253N5DB
	32	S3-00323P1DB	S3-00323N1DB	S3-00323P5DB	S3-00323N5DB
	40	S3-00403P1DB	S3-00403N1DB	S3-00403P5DB	S3-00403N5DB
	63	S3-063A3P1DB	S3-063A3N1DB	S3-063A3P5DB	S3-063A3N5DB
00	80	S3-00803P1DB	S3-00803N1DB	S3-00803P5DB	S3-00803N5DB
	100	S3-100B3P1DB	S3-100B3N1DB	S3-100B3P5DB	S3-100B3N5DB
0	125	S3-01253P1DB	S3-01253N1DB	S3-01253P5DB	S3-01253N5DB

PANEL MOUNTING (PM)









									
		3P	3P+N	3P	3P+N	3P	3P+N	3P	3P+N
Size	Amp	Code	Code	Code	Code	Code	Code	Code	Code
000	16	S3-00163P4PM	S3-00163N4PM	S3-00163P3PM	S3-00163N3PM	S3-00163P7PM	S3-00163N7PM	S3-00163P6PM	S3-00163N6PM
	20	S3-00203P4PM	S3-00203N4PM	S3-00203P3PM	S3-00203N3PM	S3-00203P7PM	S3-00203N7PM	S3-00203P6PM	S3-00203N6PM
	25	S3-00253P4PM	S3-00253N4PM	S3-00253P3PM	S3-00253N3PM	S3-00253P7PM	S3-00253N7PM	S3-00253P6PM	S3-00253N6PM
	32	S3-00323P4PM	S3-00323N4PM	S3-00323P3PM	S3-00323N3PM	S3-00323P7 PM	S3-00323N7PM	S3-00323P6PM	S3-00323N6PM
	40	S3-00403P4PM	S3-00403N4PM	S3-00403P3PM	S3-00403N3PM	S3-00403P7PM	S3-00403N7PM	S3-00403P6PM	S3-00403N6PM
	63	S3-063A3P4PM	S3-063A3N4PM	S3-063A3P3PM	S3-063A3N3PM	S3-063A3P7PM	S3-063A3N7PM	S3-063A3P6PM	S3-063A3N6PM
00	80	S3-00803P4PM	S3-00803N4PM	S3-00803P3PM	S3-00803N3PM	S3-00803P7PM	S3-00803N7PM	S3-00803P6PM	S3-00803N6PM
	100	S3-100B3P4PM	S3-100B3N4PM	S3-100B3P3PM	S3-100B3N3PM	S3-100B3P7PM	S3-100B3N7PM	S3-100B3P6PM	S3-100B3N6PM
0	125	S3-01253P4PM	S3-01253N4PM	S3-01253P3PM	S3-01253N3PM	S3-01253P7PM	S3-01253N7PM	S3-01253P6PM	S3-01253N6PM

DOOR INTERLOCK (DC)









									
		3P	3P+N	3P	3P+N	3P	3P+N	3P	3P+N
Size	Amp	Code	Code	Code	Code	Code	Code	Code	Code
000	16	S3-00163P4DC	S3-00163N4DC	S3-00163P3DC	S3-00163N3DC	S3-00163P7DC	S3-00163N7DC	S3-00163P6DC	S3-00163N6DC
	20	S3-00203P4DC	S3-00203N4DC	S3-00203P3DC	S3-00203N3DC	S3-00203P7DC	S3-00203N7DC	S3-00203P6DC	S3-00203N6DC
	25	S3-00253P4DC	S3-00253N4DC	S3-00253P3DC	S3-00253N3DC	S3-00253P7DC	S3-00253N7DC	S3-00253P6DC	S3-00253N6DC
	32	S3-00323P4DC	S3-00323N4DC	S3-00323P3DC	S3-00323N3DC	S3-00323P7DC	S3-00323N7DC	S3-00323P6DC	S3-00323N6DC
	40	S3-00403P4DC	S3-00403N4DC	S3-00403P3DC	S3-00403N3DC	S3-00403P7DC	S3-00403N7DC	S3-00403P6DC	S3-00403N6DC
	63	S3-063A3P4DC	S3-063A3N4DC	S3-063A3P3DC	S3-063A3N3DC	S3-063A3P7DC	S3-063A3N7DC	S3-063A3P6DC	S3-063A3N6DC
00	80	S3-00803P4DC	S3-00803N4DC	S3-00803P3DC	S3-00803N3DC	S3-00803P7DC	S3-00803N7DC	S3-00803P6DC	S3-00803N6DC
	100	S3-100B3P4DC	S3-100B3N4DC	S3-100B3P3DC	S3-100B3N3DC	S3-100B3P7DC	S3-100B3N7DC	S3-100B3P6DC	S3-100B3N6DC
0	125	S3-01253P4DC	S3-01253N4DC	S3-01253P3DC	S3-01253N3DC	S3-01253P7DC	S3-01253N7DC	S3-01253P6DC	S3-01253N6DC

The code includes a 135mm long shaft.

MULTIPOLE AND CHANGEOVER SWITCHES

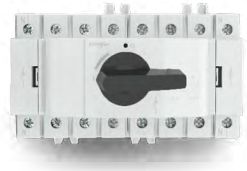



		DIN-Rail mounting Multipole switch*1		DIN-Rail mounting Changeover (I-0-II)		DIN-Rail mounting Changeover with overlapping (I-(I+II)-II)	
		6P	8P	3P	3P+N	3P	3P+N
Size	Amp	Code	Code	Code	Code	Code	Code
000	16	S3M00166P0DB	S3M00168P0DB	S3L00163P1DB	S3L00163N1DB	S3S00163P1DB	S3S00163N1DB
	20	S3M00206P0DB	S3M00208P0DB	S3L00203P1DB	S3L00203N1DB	S3S00203P1DB	S3S00203N1DB
	25	S3M00256P0DB	S3M00258P0DB	S3L00253P1DB	S3L00253N1DB	S3S00253P1DB	S3S00253N1DB
	32	S3M00326P0DB	S3M00328P0DB	S3L00323P1DB	S3L00323N1DB	S3S00323P1DB	S3S00323N1DB
	40	S3M00406P0DB	S3M00408P0DB	S3L00403P1DB	S3L00403N1DB	S3S00403P1DB	S3S00403N1DB
	63	S3M063A6P0DB	S3M063A8P0DB	S3L063A3P1DB	S3L063A3N1DB	S3S063A3P1DB	S3S063A3N1DB
00	80	S3M00806P0DB	S3M00808P0DB	S3L00803P1DB	S3L00803N1DB	S3S00803P1DB	S3S00803N1DB
	100	S3M100B6P0DB	S3M100B8P0DB	S3L100B3P1DB	S3L100B3N1DB	S3S100B3P1DB	S3S100B3N1DB

*1 handle without lock

Enclosed solutions

PLASTIC ENCLOSURE (EP)





		3P	3P+N	6P	8P	3P	3P+N	6P	8P
Size	Amp	Code	Code	Code	Code	Code	Code	Code	Code
000	16	S3-00163P4EP	S3-00163N4EP	S3M00166P4EP	S3M00168P4EP	S3-00163P3EP	S3-00163N3EP	S3M00166P3EP	S3M00168P3EP
	20	S3-00203P4EP	S3-00203N4EP	S3M00206P4EP	S3M00208P4EP	S3-00203P3EP	S3-00203N3EP	S3M00206P3EP	S3M00208P3EP
	25	S3-00253P4EP	S3-00253N4EP	S3M00256P4EP	S3M00258P4EP	S3-00253P3EP	S3-00253N3EP	S3M00256P3EP	S3M00258P3EP
	32	S3-00323P4EP	S3-00323N4EP	S3M00326P4EP	S3M00328P4EP	S3-00323P3EP	S3-00323N3EP	S3M00326P3EP	S3M00328P3EP
	40	S3-00403P4EP	S3-00403N4EP	S3M00406P4EP	S3M00408P4EP	S3-00403P3EP	S3-00403N3EP	S3M00406P3EP	S3M00408P3EP
	63	S3-063A3P4EP	S3-063A3N4EP	S3M063A6P4EP	S3M063A8P4EP	S3-063A3P3EP	S3-063A3N3EP	S3M063A6P3EP	S3M063A8P3EP
00	80	S3-00803P4EP	S3-00803N4EP	S3M00806P4EP	S3M00808P4EP	S3-00803P3EP	S3-00803N3EP	S3M00806P3EP	S3M00808P3EP
	100	S3-100B3P4EP	S3-100B3N4EP	S3M100B6P4EP	S3M100B8P4EP	S3-100B3P3EP	S3-100B3N3EP	S3M100B6P3EP	S3M100B8P3EP
0	125	S3-01253P4EP	S3-01253N4EP	-	-	S3-01253P3EP	S3-01253N3EP	-	-

ALUMINIUM ENCLOSURE (EA)





		3P	3P+N	3P	3P+N
Size	Amp	Code	Code	Code	Code
000	16	S3-00163P4EA	S3-00163N4EA	S3-00163P3EA	S3-00163N3EA
	20	S3-00203P4EA	S3-00203N4EA	S3-00203P3EA	S3-00203N3EA
	25	S3-00253P4EA	S3-00253N4EA	S3-00253P3EA	S3-00253N3EA
	32	S3-00323P4EA	S3-00323N4EA	S3-00323P3EA	S3-00323N3EA
	40	S3-00403P4EA	S3-00403N4EA	S3-00403P3EA	S3-00403N3EA
	63	S3-063A3P4EA	S3-063A3N4EA	S3-063A3P3EA	S3-063A3N3EA
00	80	S3-00803P4EA	S3-00803N4EA	S3-00803P3EA	S3-00803N3EA
	100	S3-100B3P4EA	S3-100B3N4EA	S3-100B3P3EA	S3-100B3N3EA

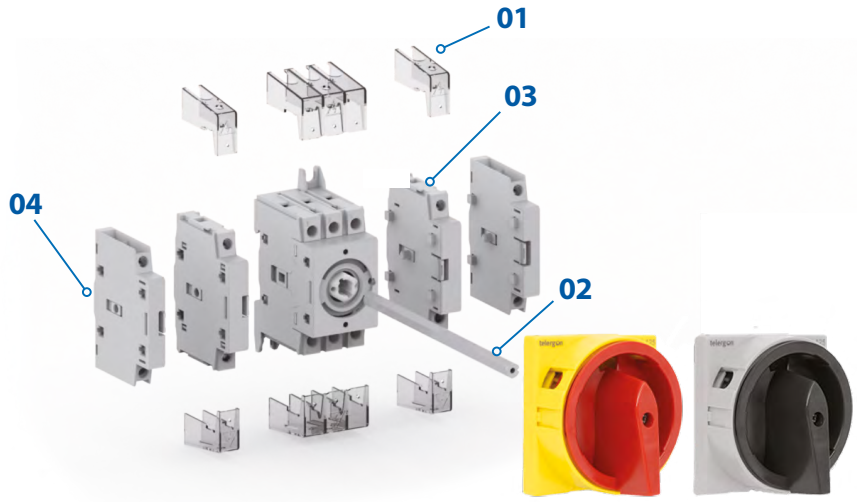

01 Terminal shrouds

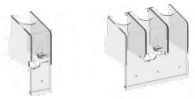

		1P (1 unit)	3P (1 unit)
Size	Amp	Part Number	Part Number
000	16A-63A	**DS3CUA2**	DS3CUA1
00	80A-100A	**DS3CUB2**	DS3CUB1
0	125A	**DS3CU02**	DS3CU01

02 Shaft options

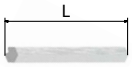

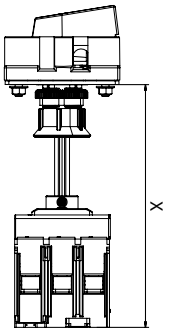

X min		X max		L		Part Number
mm	inch	mm	inch	mm	inch	
108	4.25	187.2	7.37	135	5.31	**Standard shaft**
108	4.25	202.2	7.96	150	5.91	**DS3EPB1**
108	4.25	252.2	9.93	200	7.87	**DS3EPB2**
108	4.25	372.4	14.66	320	12.60	**DS3EPB3**

03 Side Mount Add-on Pole



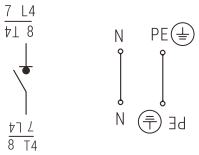

			Simultaneous		Early-make		Fixed neutral		Earth /Ground	
			Front installation	Reverse installation	Front installation	Reverse installation	Front installation	Reverse installation	Front installation	Reverse installation
			DB/DC/EP/EA	PM	DB/DC/EP/EA	PM	DB/DC/EP/EA	PM	DB/DC/EP/EA	PM
Size	Amp	Width (mm)	Part Number	Part Number	Part Number	Part Number	Part Number	Part Number	Part Number	Part Number
000	16A-63A	11	**DS3PSAF**	**DS3PSAR**	**DS3PDAF**	**DS3PDAR**	**DS3PNAF**	**DS3PNAR**	**DS3PEAF**	**DS3PEAR**
00	80A-100A	16	**DS3PSBF**	**DS3PSBR**	**DS3PDBF**	**DS3PDBR**	**DS3PNBF**	**DS3PNBR**	**DS3PEBF**	**DS3PEBR**
0	125A	21.3	**DS3PS0F**	**DS3PS0R**	**DS3PD0F**	**DS3PD0R**	**DS3PN0F**	**DS3PN0R**	**DS3PE0F**	**DS3PE0R**

Maximum capacity:
1 pole (Fixed Power/Neutral/Earth) + 3 auxiliary contacts (NO/NC)
2 poles (Fixed Power/Neutral/Earth) + 1 auxiliary contact (NO/NC)

04 Add-on Auxiliary Contacts



Width		1NO+1NC		2NO	
mm	inch	DB/DC/EP/EA	PM	DB/DC/EP/EA	PM
9	0.35	**DS3AUP1**	**DS3AUP1R**	**DS3AUP2**	**DS3AUP2R**

Maximum of 3 auxiliary contacts (NO/NC). See user manual for details.
AC electrical characteristics AC-13: 10A, 230 VAC; AC-15: 6A, 230 VAC.

Dimensions

DIN-RAIL MOUNTING (DB)

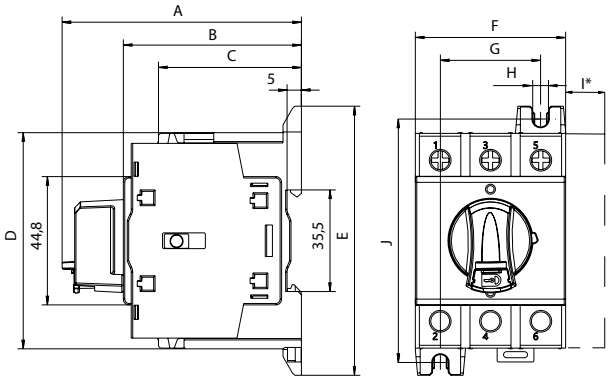

	Size	A	B	C		D	E	F	G	H	I*	J
				3P	3P+N							
S3	16A-63A	83,7	62,5	49,9	51,5	68,5	87	35,5	23,7	5,5	11	78
S3	80A-100A	84	62,5	49,9		75,5	94	52,5	35	5,5	16	85
S3	125A	83,7	62,5	52,2		109,6	130,6	69,1	23,9	5,4	20,9	122

PANEL MOUNTING (PM)

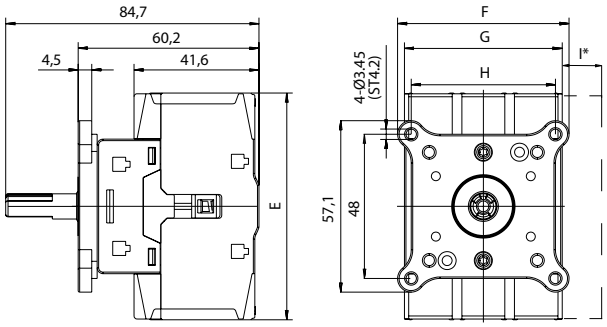

	Size	E	F	G	F	I*
S3	16A-63A	68,5	57,1	48	35,5	11
S3	80A-100A	75,5	57,1	48	48	16
S3	125A	109,6	57,1	48	48	20,9

DOOR INTERLO K (DC)

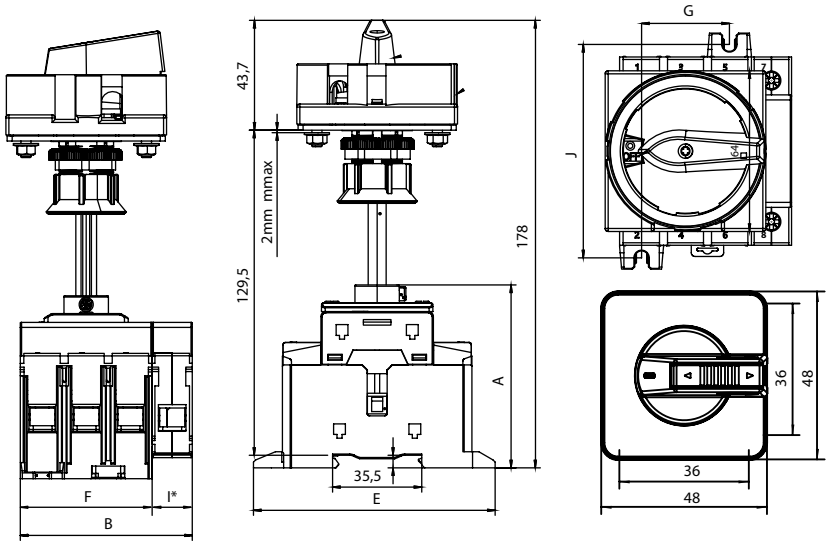

	Size	A	B	E	F	G	I*	J
S3	16A-63A	72,8	46,5	23,7	35,5	68,5	11	78
S3	80A-100A	72,9	68,5	35	52,5	94	16	85
S3	125A	72,8	90,4	23,9	69,1	109,6	21,3	122

PLASTIC ENCLOSURE (EP)

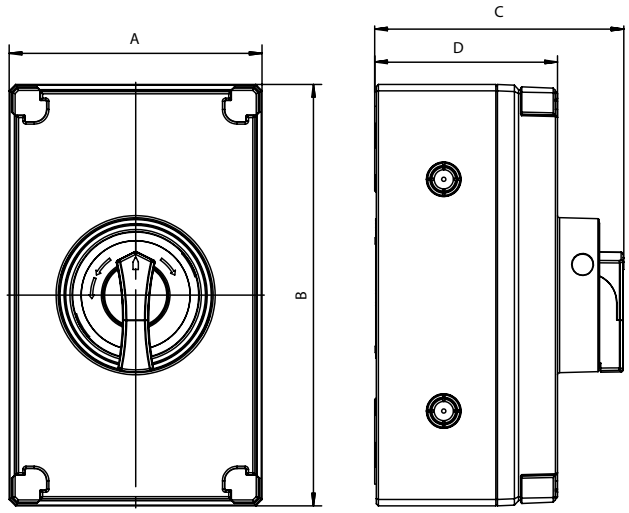

	Size	A		B		C		D	
		3P 3P+N	6P 8P	3P 3P+N	6P 8P	3P 3P+N	6P 8P	3P 3P+N	6P 8P
S3	16A-63A	105	120	150	200	118	134,5	86,8	103,3
	80A-100A	120	205	200	320	118	142	86,8	110,8
	125A	205		320		142		110,8	

ALUMINIUM ENCLOSURE (EA)

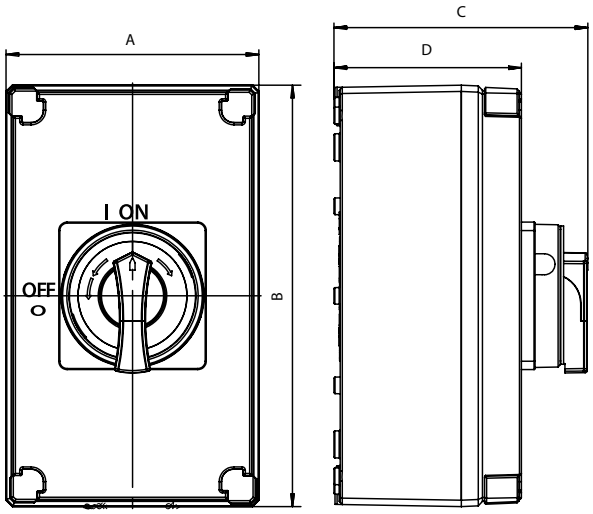

	Size	A	B	C	D
S3	16A-63A	105	150	120,6	89
	80A-100A	120	200	120,6	89

Dimensions

MULTIPOLE AND CHANGEOVER SWITCH

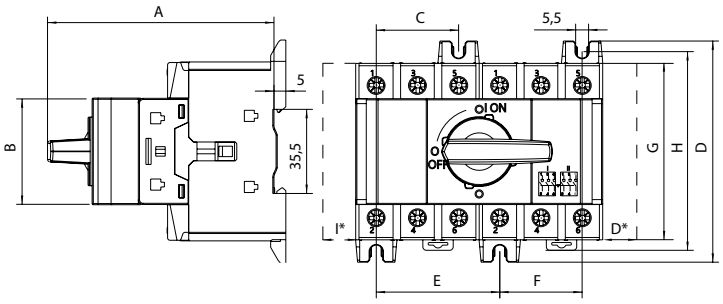

	Size	A	B	C	D	E	F	G	H	I*
S3M	000	98	44,8	27,67	87	35,5	35,5	75,5	78	11
	00	95,6	44,8	35	94	52,5	35	75,5	85	16

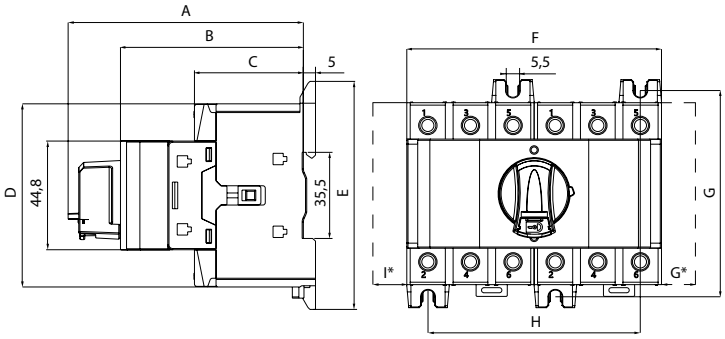

	Size	A	B	C	D	E	F	G	H	I*
S3S	000	98	76,7	50,1	75,5	87	71	87	71	11
S3L	00	97	75,4	44,9	75,5	94	87,5	85	87,5	16

ADD ON POLE

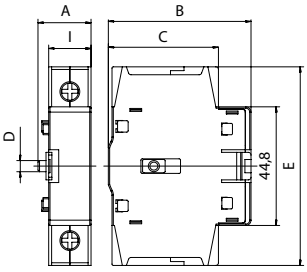

DB / DC & PM MOUNTING

	Size	A	B		C		DØ	E	I
			DB DC	PM	DB DC	PM			
S3	000	15,1	53,9	52,6	41,6		4,1	68	11
	00	20	53,9	52,6	41,6		4,2	75	16
	0	25,3	53,9	52,6	43,9	43,86	3,8	109,5	21,3

AUXILIARY CONTACT

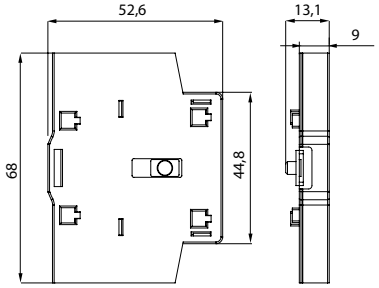

series

S3

AC Compact Switch-Disconnectors





Telergon, SAU
Ctra. Castellón – Pol. La Cartuja
50720 La Cartuja Baja
Zaragoza, Spain

Tel. +34 976 500 876
info@telergon.com
www.telergon.com

TDM-S3-IEC-ENG-112026