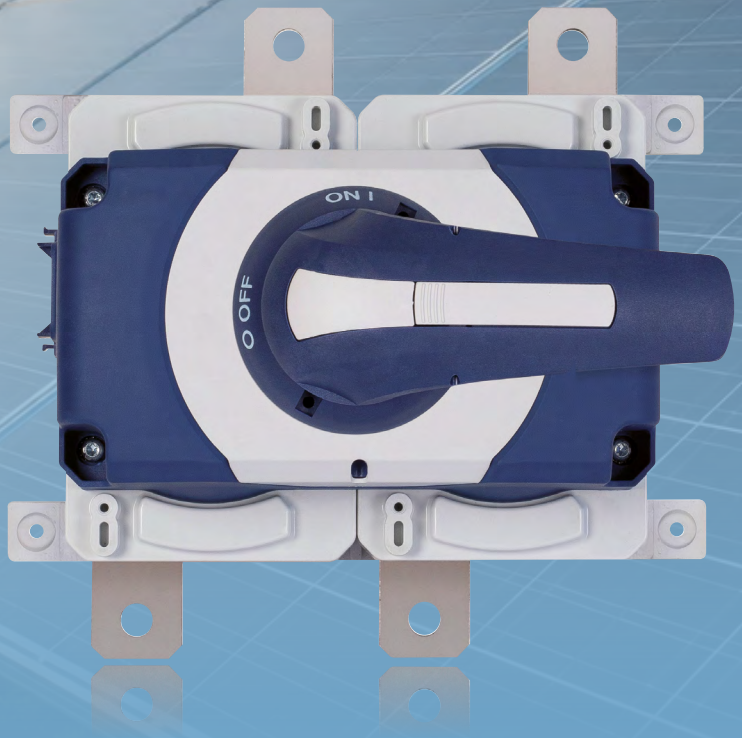

IEC

Front and side operation
Patented innovation
Up to 1500 V DC
From 160 A to 500 A

S7 | DC SWITCH DISCONNECTOR 2P

www.telergon.com

gorlan

Key features

- 160–500 A
- Ui 1500 V DC / Uimp 12 kV
- No derating up to 70°C and 2,000 m
- Short-circuit current rating: 10 kA (peak)
- Power dissipation per pole: 10.58 W (400 A) & 16.53 W (500 A)
- Max. RH: 95%
- Short-circuit protection by fuse (gBat): 120 kA*
- Non-polarized, allowing any type of connection
- Operating temperature: -40ºC to 70ºC (internal tests)

*Maximum let-through current: 20 kA



Applications



Combiner boxes



Disconnect boxes



BESS



EV Chargers



800VDC Busway in Data Centers

Certified for Global Markets

IEC 60947-3 | UL98B Listed guide WHVA | File E333311

MAXIMIZED ELECTRICAL PERFORMANCE

Effective breakdown: rotary, double per pole and at high-speed. The lowest power losses in the market.

HIGH SAFETY LEVEL

Powerful spring mechanism and movable magnets that improve arc extinction.

SUITABLE FOR EXTREME ENVIRONMENTS

High temperature withstand, with no derating up to 70 ºC.

VERSATILE OPERATION & COMPACT DESIGN

Possibility of front or side operation. It is compatible with a wide range of accessories.

LONGER LIFE

Fast breaking capacity helps to reduce the contact wear and, consequently, ensures a longer life.

EASY TO INSTALL

A reduced footprint, multiple mounting configurations and a non-polarised wiring all help to reduce installation time and space.

RANGE








Amp (A)	Poles	Front operation	Side operation	External handle	Direct handle	Aux Contacts		Captive Nut		Spacers	Shaft guide*2
						1NO + 1NC	2NO+2NC	M10	M12	4 pcs	
160	2P	S7-01602PS0	S7-01602PSL	DS-SA11 227 mm shaft included*1	DS-SI11	DM-AU11	DM-AU12	DM-PT11	DM-PT12	DM-EL11	DS-EC00
200		S7-02002PS0	S7-02002PSL								
250		S7-02502PS0	S7-02502PSL								
315		S7-03152PS0	S7-03152PSL								
400		S7-04002PS0	S7-04002PSL								
500		S7-05002PS0	S7-05002PSL								

*1 For longer shafts, please, consult. Valid for front and side operation.
*2 The use of the shaft guide DS-EC00 is necessary for shaft extension

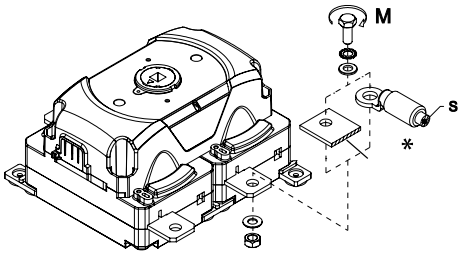

CONNECTION CAPACITY




	Amperage (A)	S min	H min	L* min	T	M +5% -10%
		mm²	Qty x mm	mm		Nxm
According to IEC 60947-3	160	70	1x3	25	M10	18
	200	95	1x3	30		
	250	120	1x4	30		
	315	185	2x3	30		
	400	240	2x4	30		
	500	300	2x4	35	M12	24

* 30 or 35 mm terminal size is available for different amperages on request, please consult us.



DIMENSIONS

FRONT OPERATION

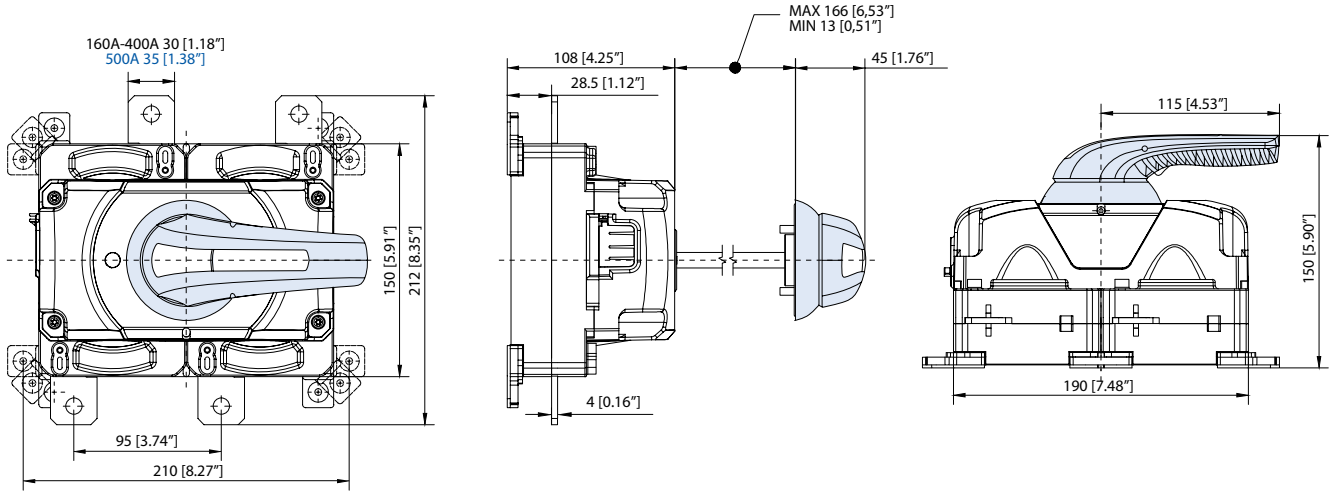

SIDE OPERATION

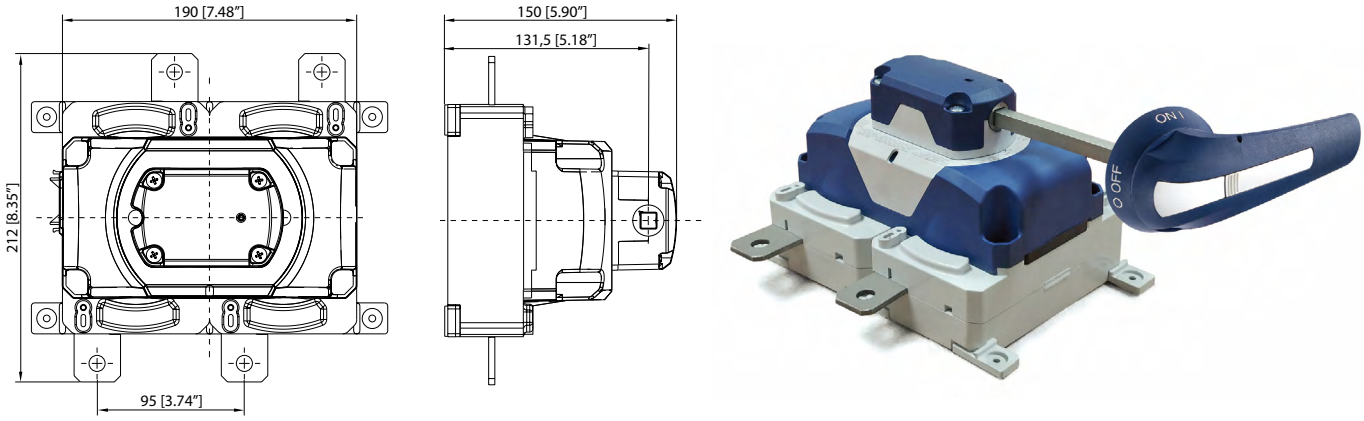

ASSEMBLY INSTRUCTIONS

CE DECLARATION

CB TEST CERTIFICATE 400A

CB TEST CERTIFICATE 500A

Telergon, SAU
Ctra. Castellón – Pol. La Cartuja
50720 La Cartuja Baja
Zaragoza, Spain

Tel. +34 976 500 876
info@telergon.com
www.telergon.com

TDM-S7IEC-ENG-112026